EXHIBIT A

Easement No. CO-CE-061

GRANTOR'S PROPERTY

That part of Lot 1, Auditor's Subdivision No. 72 in Section 8, Township 31, Range 24, according to the plat on file in the office of the Anoka County Recorder, which lies northeasterly and northerly of the following described line:
Commencing at the northeast corner of the Northwest Quarter of Section 8, Township 31, Range 24, Anoka County, Minnesota; thence South 89 degrees 25 minutes 26 seconds West, assumed bearing, along the north line of said Northwest Quarter 95.00 feet; thence South 00 degrees 00 minutes 55 seconds East 130.01 feet to the point of beginning of the line to be described; thence North 45 degrees 17 minutes 49 seconds West 28.15 feet; thence South 89 degrees 25 minutes 26 seconds West 421.62 feet; thence South 00 degrees 34 minutes 34 seconds East 10.00 feet; thence South 89 degrees 25 minutes 26 seconds West 267.98 feet to the northeasterly right-of-way line of Burlington Northern Inc. railroad and said line there terminating.

EASEMENT PREMISES

All that part of the above described "Grantor's Property" lying within Thirty-five (35) feet on each side of the following described centerline:

Commencing at the northwest corner of the Northwest Quarter of Section 8, Township 31 North, Range 24 West; thence South 89 degrees 55 minutes 20 seconds East, on an assumed bearing, along the north line of said Northwest Quarter a distance of 2475.5 feet to the point of beginning of the centerline to be described; thence South 00 degrees 11 minutes 08 seconds East 244.2 feet and said centerline there terminating.

The sidelines of said "Easement Premises" shall be shortened or extended so as to begin and terminate at the property lines.

The above described easement contains 0.06 acres, more or less.

Subject to highway right of way.
Subject to mining and mineral reservations of record.
Subject to easements, restrictions and reservations of record.

All in Anoka County, Minnesota.

CO-CE-061
City of Coon Rapids,
a Minnesota municipal corporation
J:\PROJECTS\2012\12-150\DWG\EXHIBITS

GREAT RIVER ENERGY ™

WORK ORDER 40011	Part of the NE 1/4 of NW 1/4 Sec. 8, Twp. 31N., Rng. 24W. Anoka County, MN		
REVISIONS	DATE 2/6/13	EXHIBIT A	Drawn By: MBN
			DWG. NO. CO-CE-061

EXHIBIT B

Easement No. CO-CE-061

LEGEND

- Denotes Grantor's Property Lines
- Denotes Easement Area
- Denotes Proposed Transmission Centerline
- Denotes Found Section Monument
- Denotes Found Property Monument
- Denotes Found R/W Monument

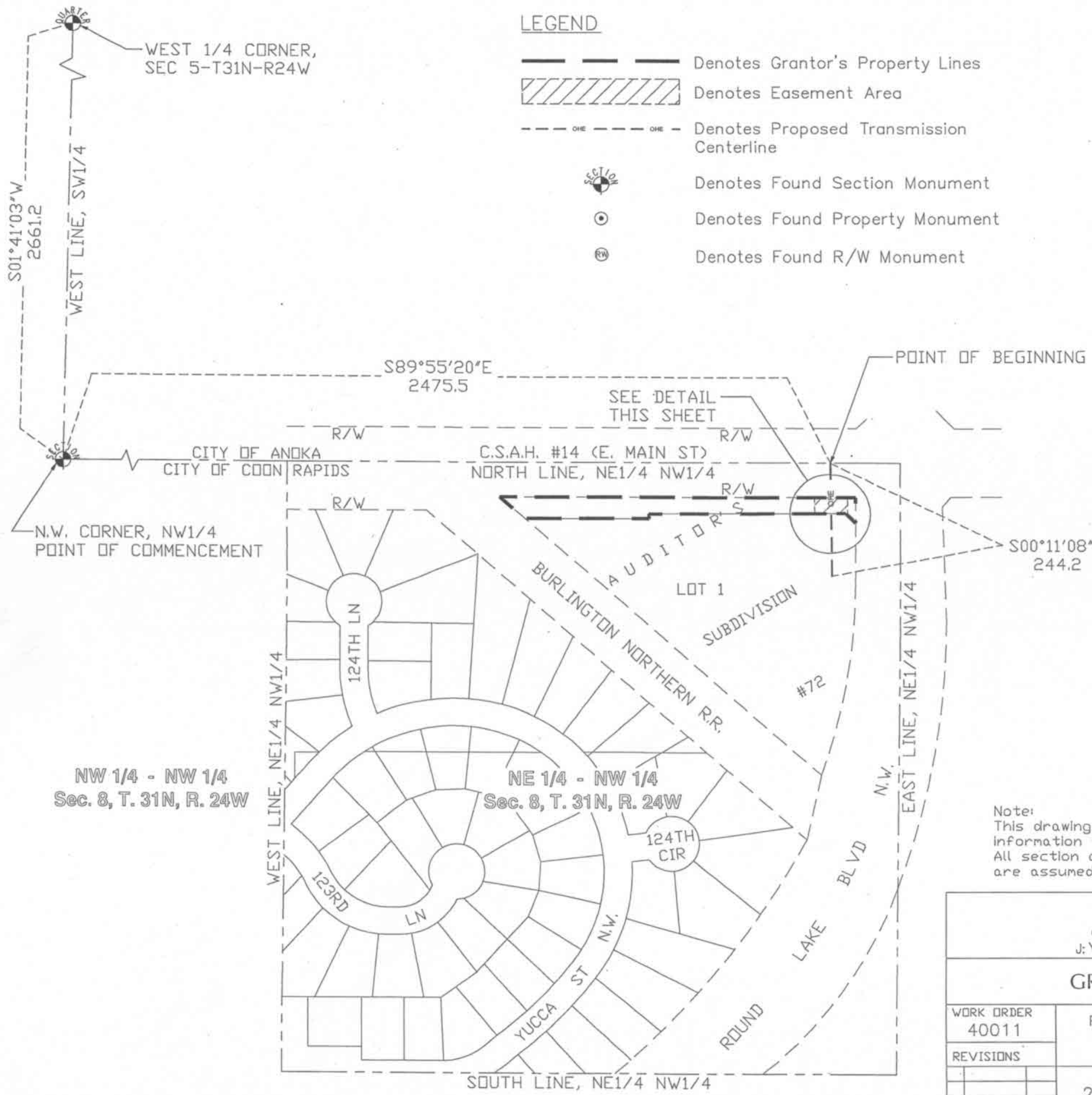

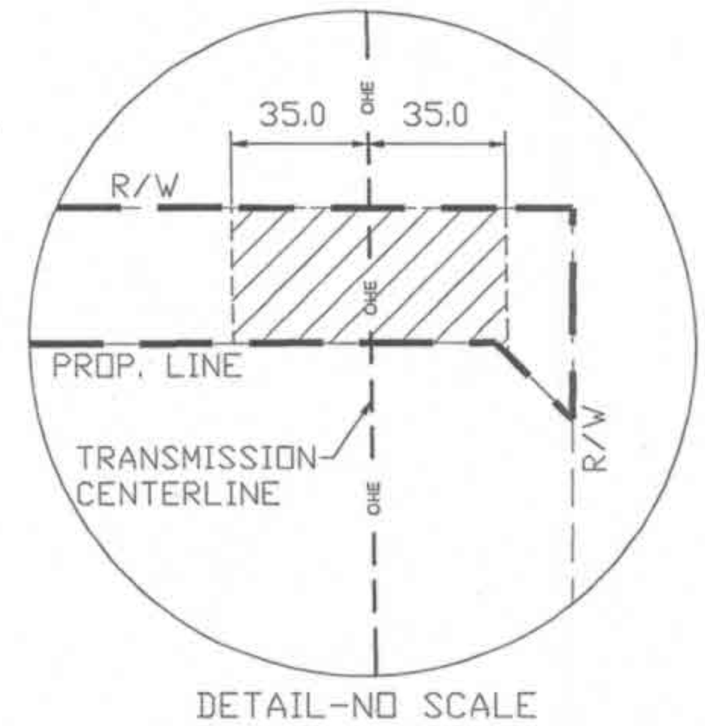

DETAIL-NO SCALE

0 150 300

SCALE IN FEET
1 inch = 300 ft.

Note:
This drawing was prepared by MBN Engineering using information from a survey done by Great River Energy. All section corners, 1/4 corners and 1/16 corners are assumed unless otherwise indicated on drawing.

CO-CE-061
City of Coon Rapids,
a Minnesota municipal corporation
J:\PROJECTS\2012\12-150\DWG\EXHIBITS

GREAT RIVER ENERGY

WORK ORDER	Part of the NE 1/4 of NW 1/4 Sec. 8, Twp. 31N., Rng. 24W. Anoka County, MN		
40011			
REVISIONS	DATE 2/6/13	EXHIBIT B	Drawn By: MBN
			DWG. NO. CO-CE-061